PRODUCTION OF XRAYS

HISTORY

- Wilhelm Conrad Roentgen, 50, professor of physics at Wurzburg University, Bavaria, had his eureka moment in 1895
- He was studying gases in his lab when he noticed photographic plates near his equipment had started to glow
- It was due to 'X'-radiation, composed of X-rays; he labelled them 'x' - a maths symbol denoting the unknown

He took X-ray of wife Anna's left hand on Dec 22 that year, complete with wedding and engagement ring

- On January 5, 1896, his findings - which included the picture of the bones of his wife's hand - were published to wide acclaim.
- His discovery earned him the first Nobel Prize for Physics in 1901.
- Roentgen died in Munich in 1923, aged 77, from bowel cancer.
- In a Science Museum poll in 2009, the X-ray was voted by the British public as the most important modern discovery.
- 14 days later the publication of Roentgen, Dr. Otto Walkhoff in Braunschweig made the first picture of the teeth.
- Walkhoff received the first intraoral X-ray after an exposure time of some 25 minutes.

X ray machine:

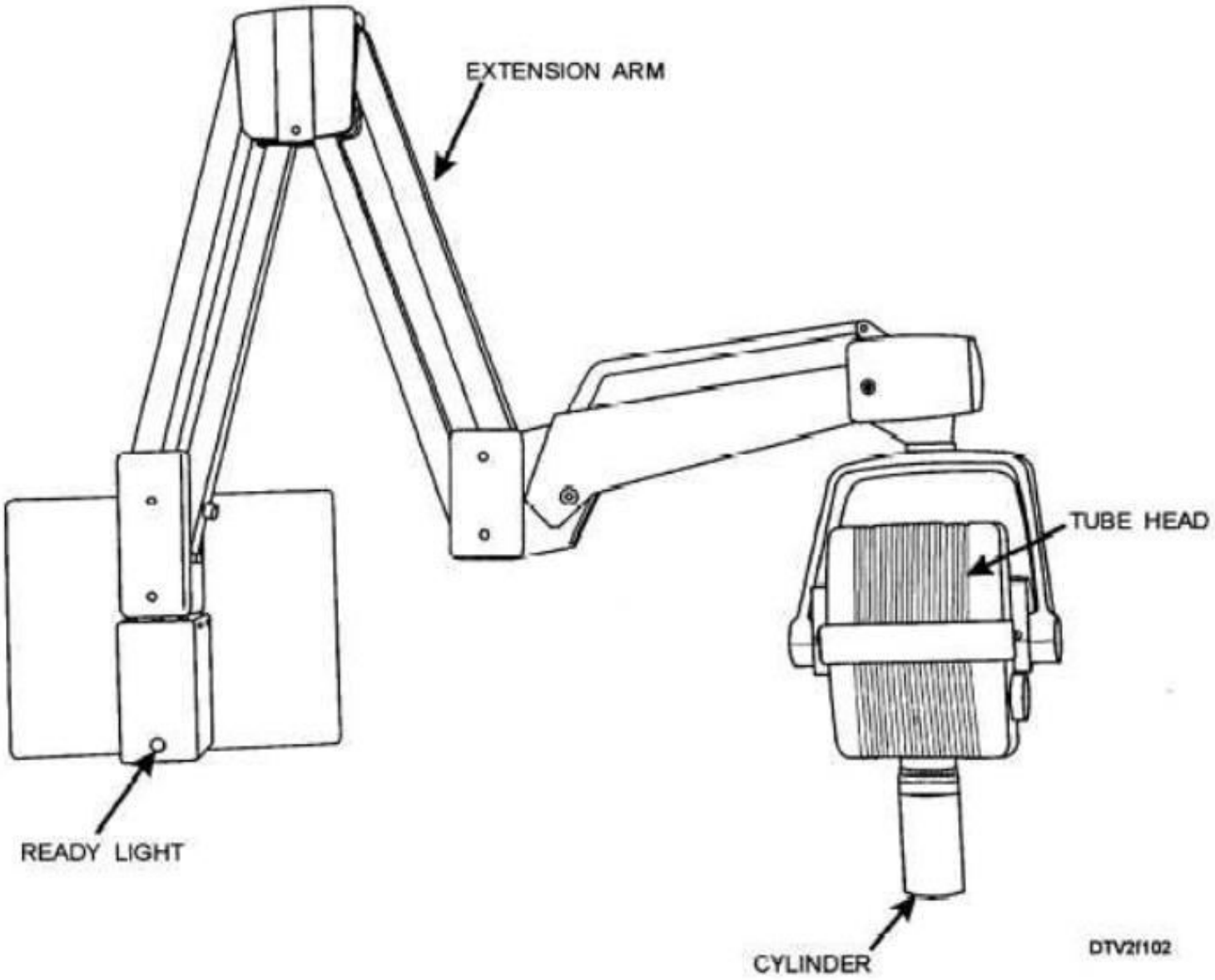
EXTENSION ARM
TUBE HEAD
READY LIGHT
CYLINDER
DTV2f102

Control panel

The mains on/off switch and warning light

• The timer

• An exposure time selector mechanism, usually either:
– numerical, time selected in seconds
– anatomical, area of mouth selected and exposure time adjusted Automaticaly

• Warning lights and audible signals to indicate when X-rays are being generated

• Other features can include:
– Film speed selector

– Patient size selector

– Mains voltage compensator

– Kilovoltage selector

– Milliamperage switch

– Exposure adjustment for digital imaging.

POSITION INDICATING DEVICE

The position-indicating device (PID) appears as an extension of the X-ray tube and is used to direct the X-ray beam.

There are three types of PIDs:

- Conical (no longer used in dentistry)
- Rectangular
- Round

TWO LENGTHS:

short -8 inches

long-16 inches

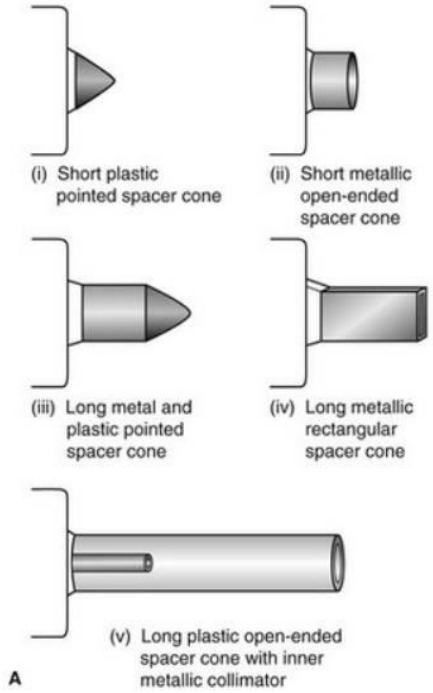

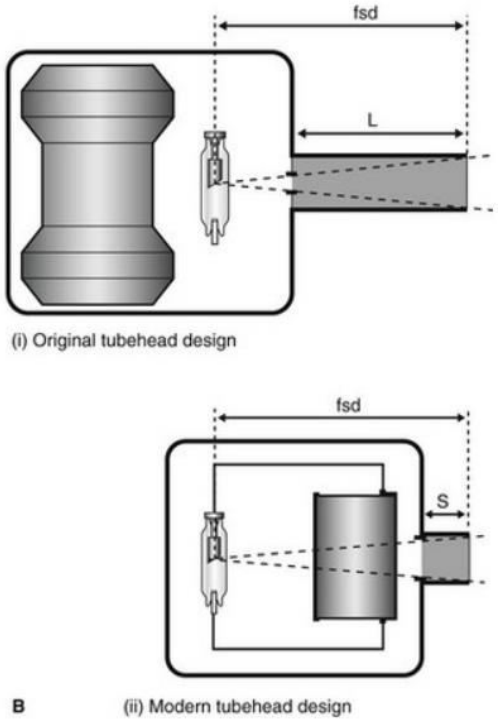

Collimator:

- Collimator is used to restrict the size and shape of the X-ray beam.
- It is a lead plate with a hole in the middle and is fitted over the opening of the machine housing where the Xray beam exits the tube head

    1. fixed
    2. adjustable (round, rectangular)

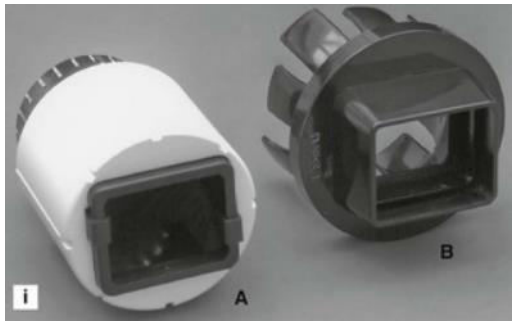

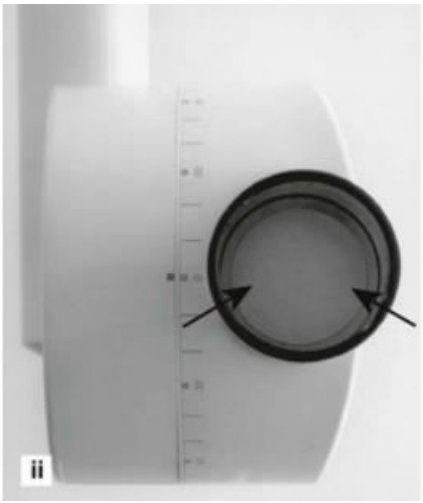

Usually 2.75 inch, larger than 2 periapical radiographic film

Four essential requirements in the production of x-ray

1. Vacuum

2. Source of electron

3. Target

4. High potential difference between the electron Source and target (voltage).

X ray tube

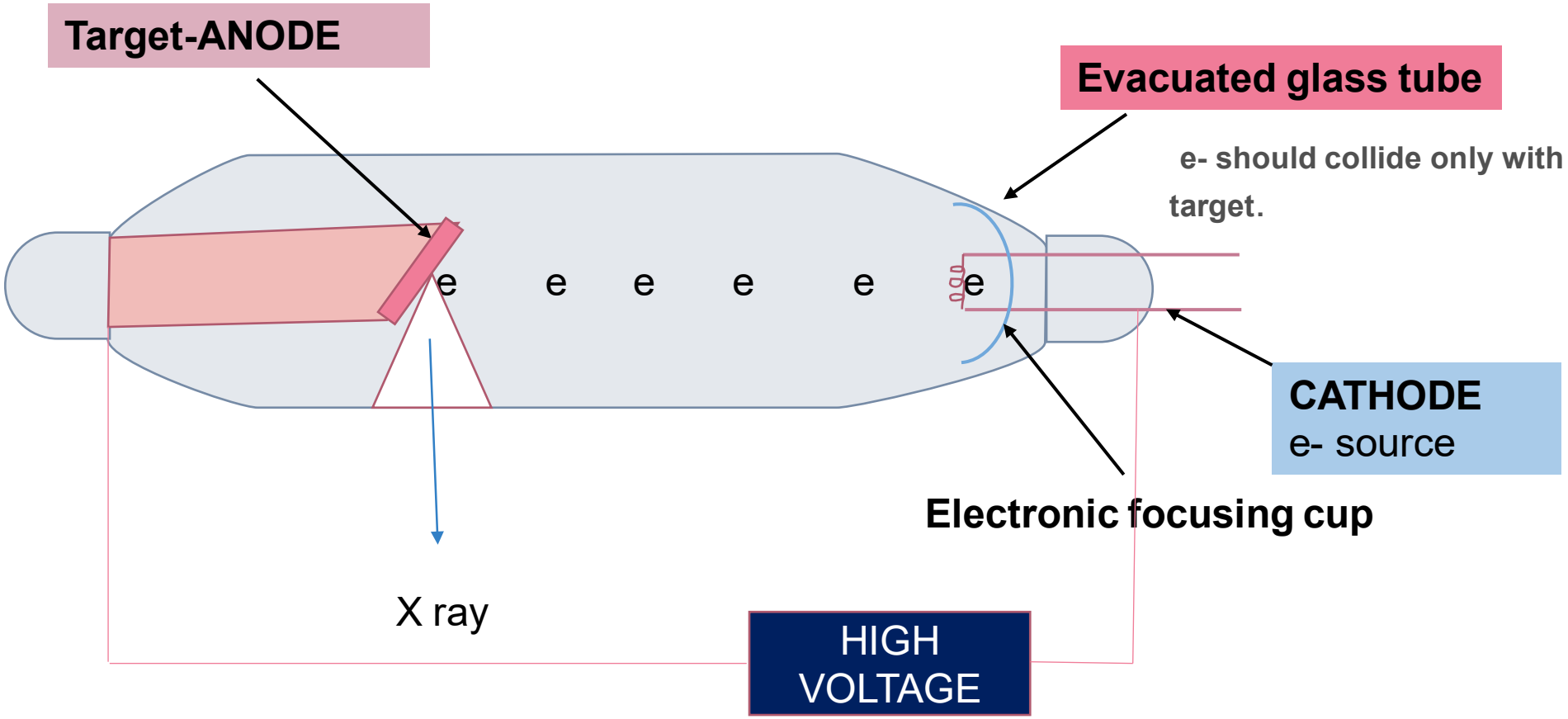
Target-ANODE
Evacuated glass tube
e- should collide only with target.
e
e
e
e
e
e
CATHODE
e- source
Electronic focusing cup
X ray
HIGH VOLTAGE

CATHODE

Filament

- (0.2 mm) tungsten wire
- very high melting temperature (3422°c)
- high atomic number (A 184, Z 74) good
- thermionic emitter (good at emitting electrons)

Focusing cup

- molybdenum
- high melting point
- poor thermionic emitter
- Negatively charged to focus the electrons towards the anode and stop spatial spreading

ANODE

- Tungsten plate embedded in a solid copper stem
- Rhenium added to tungsten to prevent cracking of anode at high temperatures and usage
- Set into an anode disk of molybdenum with stem
- Positively charged to attract electrons
- Set at angle to direct x-ray photon beam down towards patient. Usual angle is 5º - 15º
- *Purpose of the target is to convert the kinetic energy of electron generated from cathode into x –ray photons*

Types of anode

1. STATIONARY ANODE

limited to dental radiology and radiotherapy systems

anode fixed in one position

2. ROTATING ANODE

used in most radiography, including mobile sets and fluoroscopy

disc with a thin bevelled rim of tungsten around the circumference that rotates at 50 Hz

it rotates it overcomes heating by having different areas exposed to the electron stream over time

Heating of the anode

- This is the major limitation of x-ray production.

Heat (J) = w x kVp x mAs

kVe = effective kV

w = waveform of the voltage through the x-ray tube. The more uniform the waveform the lower the heat production

kVp = peak kV

mAs = current exposure time product

Heat is normally removed from the anode by radiation through the vacuum and into the conducting oil outside the glass envelope.

The molybdenum stem conducts very little heat to prevent damage to the metal bearings.

ANODE HEEL EFFECT

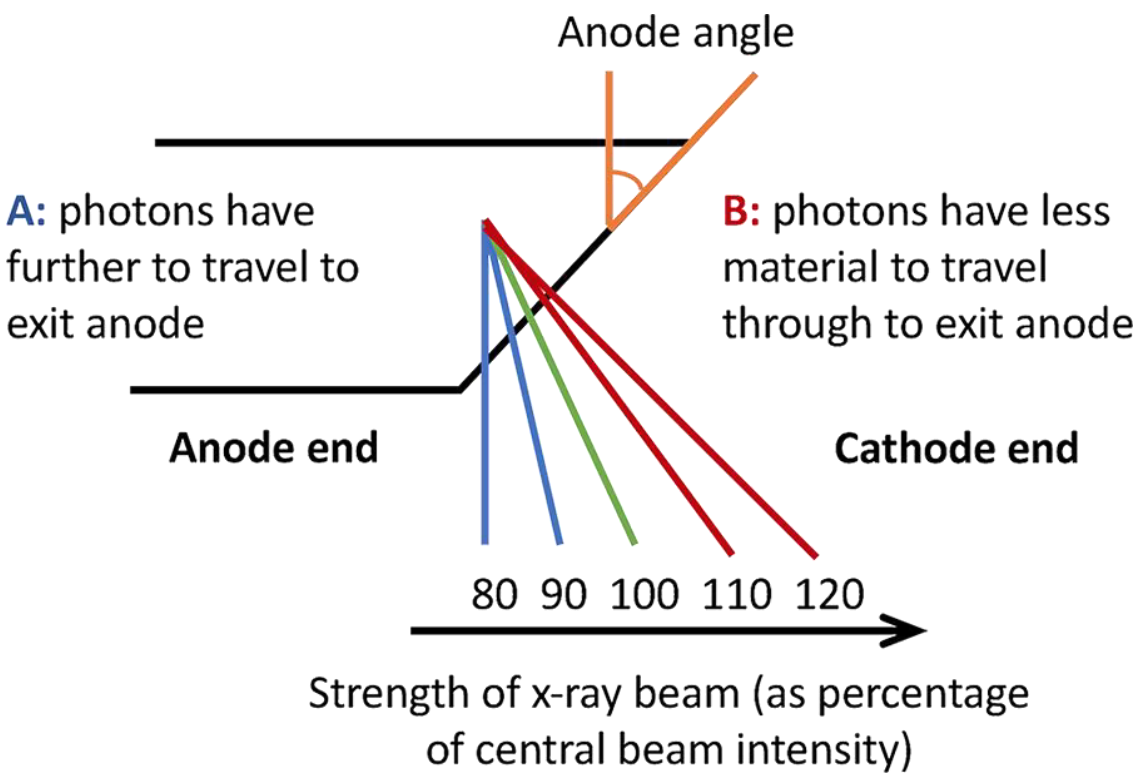

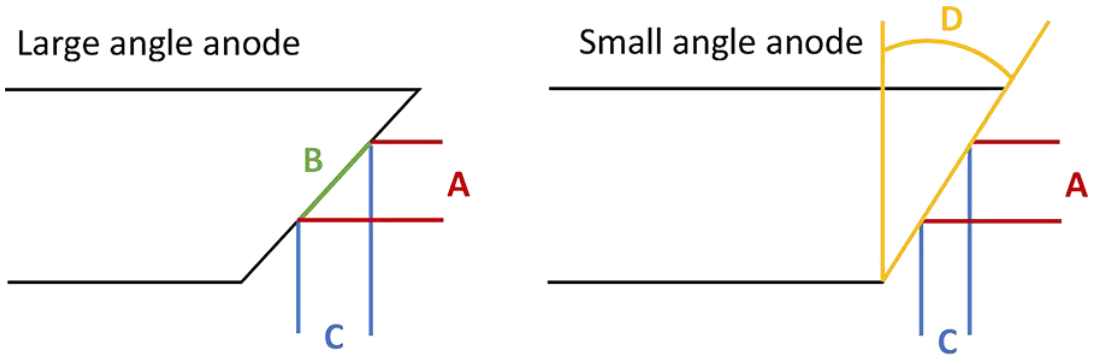

A = Bombarding electron beam
B = Actual focal spot
C = Effective focal spot
D = Angle of anode

smaller angle = smaller focal spot size but larger anode heel effect

Circuit

- Path of electrical current
- 2 circuits are used

1.filament circuit

2.high voltage circuit

Filament circuit

low voltage(3-5volts)

controlled by mA setting in the control panel

HIGH VOLTAGE circuit

- X-ray units require a high voltage generator to achieve the necessary power required of an x-ray tube.

AC power - sinusoidal currents, resulting in 'peaks and troughs',

x-ray tube Produce x-rays only half of the 1/60th of s second cycle.

single-phase high voltage generator

a half or full wave rectified supply with a measure in the thousands of volts. (65,0000-1,00,000)

- The half wave rectification results in a peak voltage that will dip to zero, reoccurring; and hence the name **kilovoltage peak (kVp)** was born.

- The advancement of high voltage generators from single-phase to three-phase to constant potential generators have overcome this 'voltage ripple' creating a continuous, uninterrupted voltage.

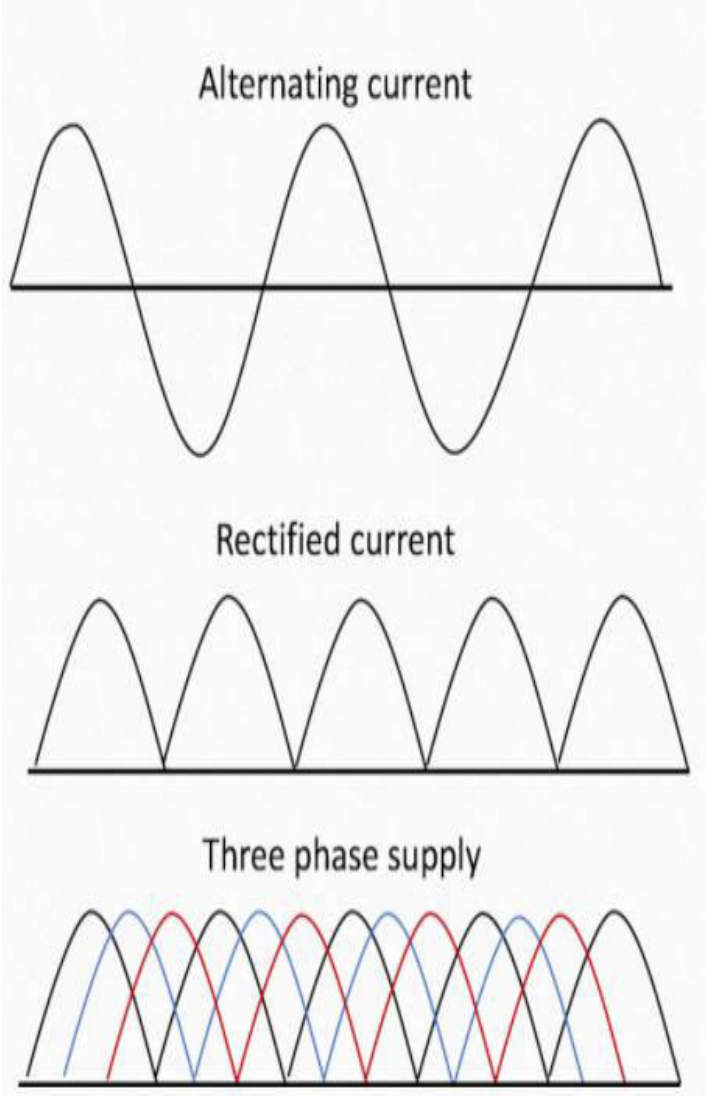

TRANSFORMER

- Transformer is a device that is used to either increase or decrease the voltage in an electrical circuit.

STEP DOWN TRANSFORMER:

decrease the voltage from the incoming 110-220 line voltage to 3-4 v as required for the filament circuit.

STEP UP TRANSFORMER:

increase the voltage from the incoming 110-220 line voltage to 65,000-1,00,000 volts

Auto transformer:

servers as a voltage compensator that corrects that minor fluctuations in the current.

TIMER

- Timing control device used to control x-ray exposure time
- Included in the high voltage supply.
- Timer completes the circuit with the high voltage transformer thereby controlling the time that the high voltage is applied to the tube and thus the time during which the tube current flows and x-rays are produced .

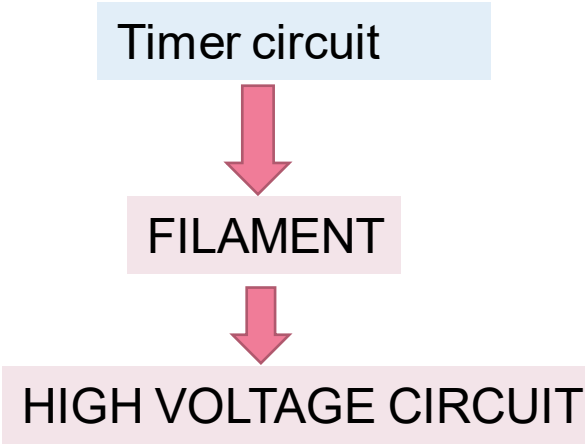

X-ray production at the anode

- The electrons hit the anode with a maximum kinetic energy of the kVp and interact with the anode by losing energy

- Elastic interaction:

rare, only happens if kVp < 10 eV. Electrons interact but conserve all their energy

- Inelastic interaction:

causes excitation / ionisation in atoms and releases energy via electromagnetic (EM) radiation and thermal energy energy of the kVp and interact with the anode by losing energy

INTRACTIONS AT THE ANODE

At the anode, electrons can interact with the atoms of the anode in several ways to produce x-ray photons.

- Outer shell interaction: low energy EM released and quickly converted into heat energy
- Inner shell interaction: produces characteristic radiation
- Nucleus field interaction: aka Bremsstrahlung

characteristic radiation

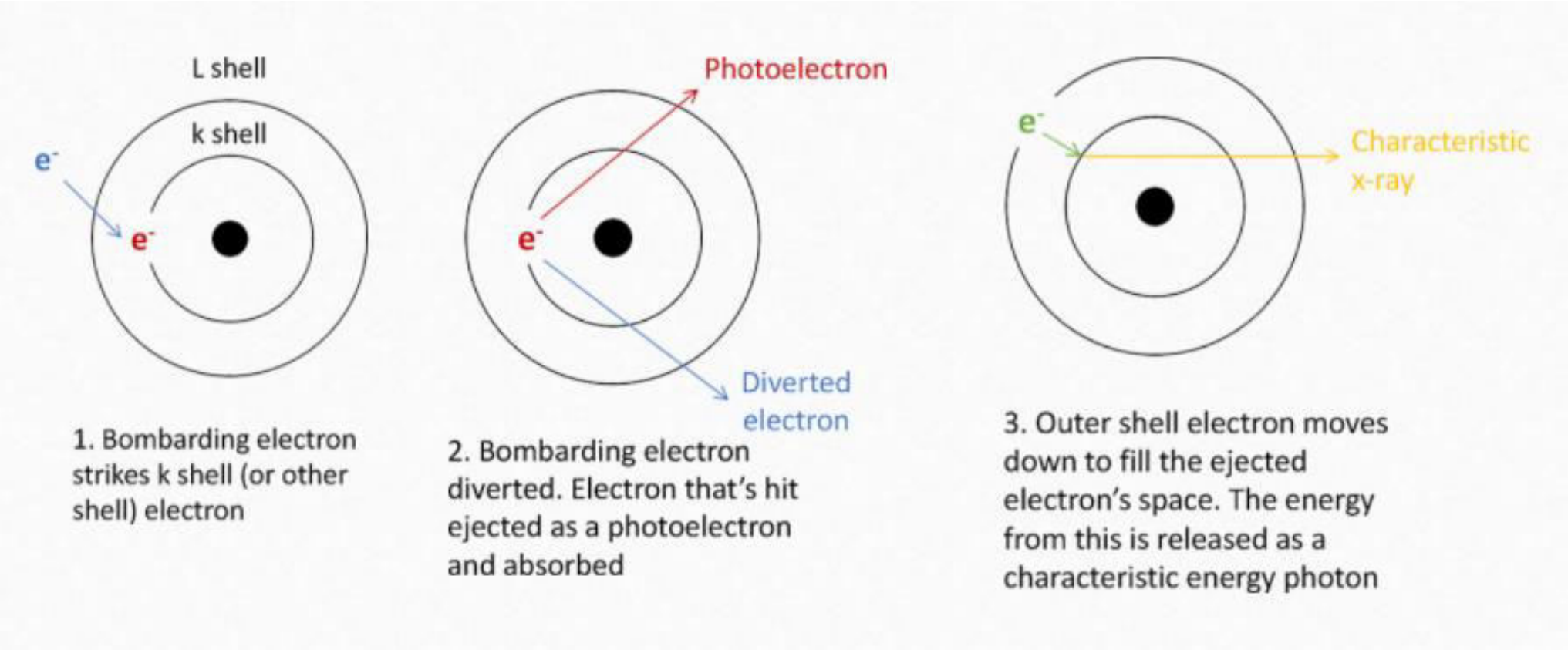

It is called "characteristic" as energy of emitted electrons is dependent upon the **anode material**, not on the tube **voltage**.

Bremsstrahlung radiation

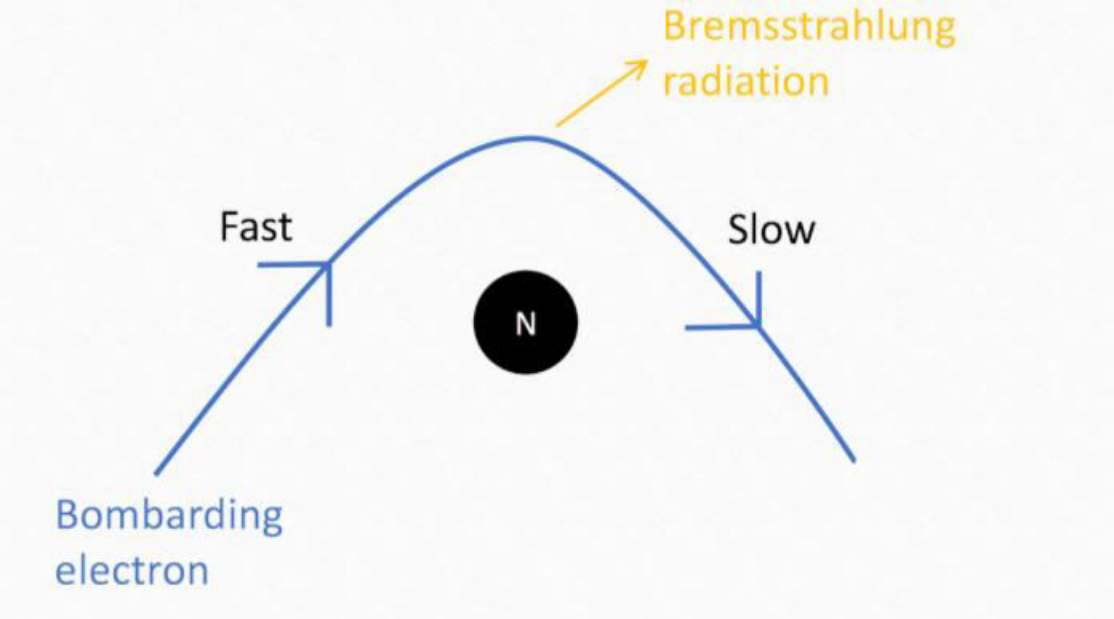

1.Bombarding electron approaches the nucleus.

2.Electron is diverted by the electric field of the nucleus.

3.The energy loss from this diversion is released as a photon (**Bremsstrahlung radiation**).

Characteristic radiation	Bremsstrahlung
Only accounts for small percentage of x-ray photons produced	Accounts for 80% of photons in x-ray beam
Bombarding electron interacts with inner shell electron	Bombarding electron interacts with whole atom
Radiation released due to electron dropping down into lower energy state	Radiation released due to diversion of bombarding electron as a result of the atomic pull
Radiation released is of a specific energy	Radiation released is of a large range of energies
X-ray photon energy depends on element of target atoms not tube voltage	X-ray photon energy depends on tube voltage

SUMMARY

Filament current applied through tungsten filament at cathode.

↓

Heats up filament to produce enough energy to overcome binding energy of electrons (**thermionic emission**).

↓

Electrons released from filament.

↓

Tube voltage is applied across the x-ray tube.

↓

Electrons, therefore, are accelerated towards positively charged anode, which gives them a certain **energy**.

↓

The electrons strike the anode and the energy released via interaction with the anode atoms produces **x-ray photons**.

These x-ray photons leave the x-ray tube through the window in an x-ray beam towards the patient.

They pass through the patient to the detector to produce the x-ray image

X-ray spectrum

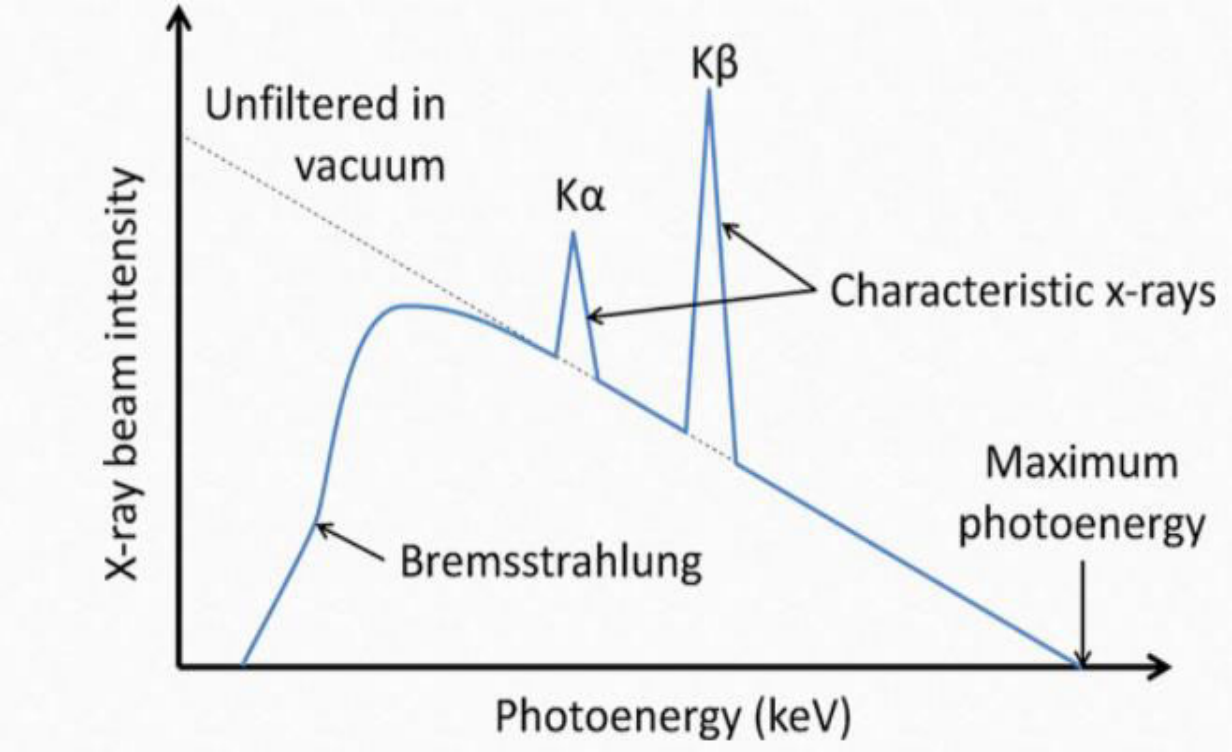

Kilovoltage

- A kilovolt is a measure of electrical current equal to 1000 Volts.
- The higher the voltage, the more energetic (thus a higher penetrating potential) the X-ray will be.
- Lower energy X-rays are absorbed by the body and objects through which they pass.
- X-rays that are absorbed do not make it to the film to create an image.
- Filters are used to eliminate these “softer” x-rays

- Kilovoltage peak (kVp) is the maximum amount of voltage used in an X-ray machine.
- Some machines can be adjusted from 50 to 100 kVp; other machines are preset to 70 kVp.
- Settings below 60 and above 85 kVp are rarely used in dentistry.
- The use of a kVp below 60 is strongly discouraged

- Every 15% increase in kVp will cause a doubling in the exposure or radiographic density.
- Going from 70 to 80 kVp doubles the exposure. To compensate, exposure time would have to be decreased by half.
- Going from 70 to 60 kVp decreases the exposure by half. To compensate, exposure time would need to be doubled

Milliamperage

- A milliampere (mA) is measure of electrical current
- The higher the amperage, the higher quantity of X-rays there will be.
- Some machines can be adjusted from 10 to 15 mA; some machines are preset to 6 or 7 mA
- Utilization of proper equipment aids in limiting the amount of radiation dental patients receive.
- The dental X-ray tubehead must be equipped with appropriate aluminum filters, lead collimator, and position-indicating device..

Interaction of x ray with matter

When x rays strike matter,such as a patient ‘s tissue,the photon has 4 fates

- Completely scattered with no loss of energy
- Absorbed with total loss of energy
- Scattered with some absorption and loss of energy
- Transmitted unchanged

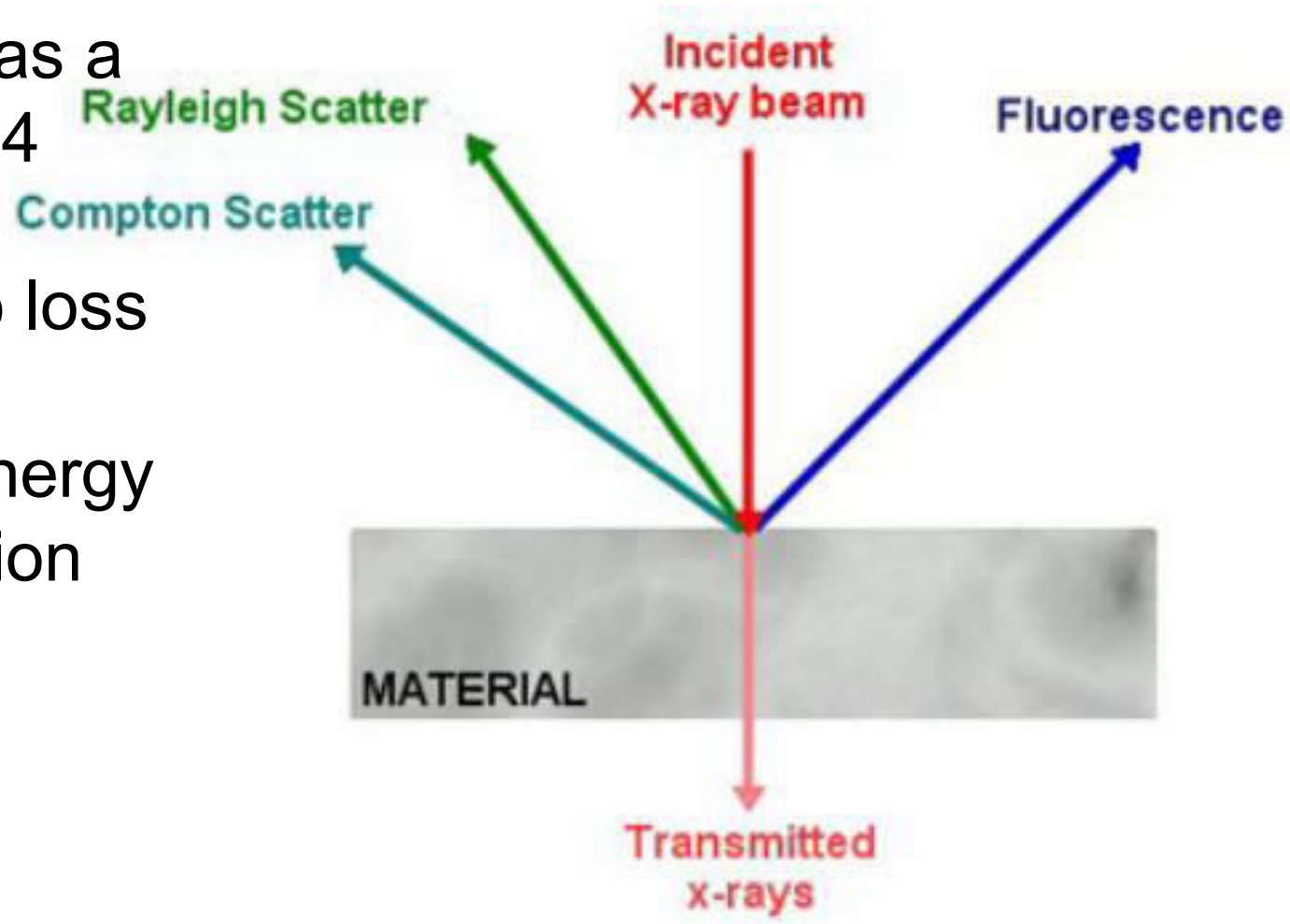

Interaction of x ray with matter

- Unmodified or Rayleigh scattering –pure scatter
- Photoelectric effect-pure absorption
- Compton effect-scatter and absorption
- Pair production-pure absorption

2 interactions are important in dentistry

photoelectric effect

Compton effect

Photoelectric effect

- Pure absorption interaction predominating with low energy photons
- The probability of photoelectric interaction occurring is inversely propotional to $1/kV^3$
- This explains why low kv x ray equipment results in high absorption in patient tissue provides good constrast in radiograph
- Intensifying screen function by photoelectric effect –when exposed to x rays ,the screens emit their excess as light which subsequently affect the film

Compton effect

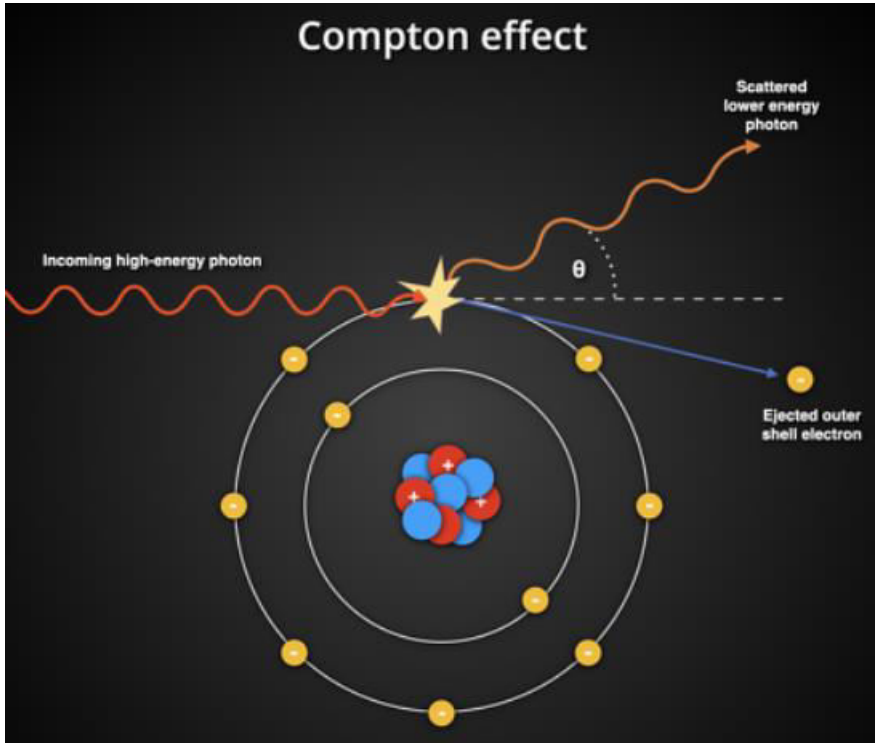

Absorption and scattering process predominating high energy photon

This explains why high voltage xrays result in radiograph with poor contrast

bone attenuates more photons by Compton interaction since the number of electrons present in a volume of bone is greater

Compton scattering depends on density.
Bone density ~ 2 x soft tissue density

Contrast is much lower
In fact, the Compton effect can reduce the detail on X-ray images due to the scattered photons.

In practice low photon energies are used to reduce the effect.

Compton effect

- Absorption and scattering process predominating high energy photon
- This explains why high voltage xrays result in radiograph with poor contrast

Reference:

- **White**, S. C., & **Pharoah**, M. J. (2009). Oral radiology: Principles and interpretation. St. Louis, Mo: Mosby/Elsevier.
- Textbook-of-Dental-and-Maxillofacial-Radiology-2nd-Karjodkar

Thank you….